Arithmetic and data handling logic circuits, decoders and encoders

Md. Islahur Rahman Ebon
Lecturer, EEE, NBIU
Mob: 01721000469
Email: irebon.rus121@gmail.com

Arithmetic and data handling logic circuits

- It refers to digital circuits designed to perform mathematical operations (like addition, subtraction, multiplication, division) on binary data, essentially the core of a computer's processing unit, often called an Arithmetic Logic Unit (ALU).
- It uses logic gates to manipulate data by executing both arithmetic and logical operations on binary numbers.

ALU (Arithmetic Logic Unit)

A central component in a CPU that combines arithmetic circuits with logic circuits to perform a wide range of operations based on a control signal, including addition, subtraction, logical AND, OR, XOR

How it works

- **Input operands**: The data to be operated on (binary numbers) are fed as inputs to the ALU.
- **Control signal**: A separate input that specifies the desired operation (add, subtract, AND, OR, etc.).
- Logic gates processing: The internal logic gates within the ALU perform the necessary operations on the input data based on the control signal.
- **Output result**: The ALU produces the calculated result as output.

A typical schematic symbol for an ALU

-A and B are the inputs to the ALU; it is the data to be operated on (called operands);
- R is the output, result of the computations
- F is the code (instruction) from the Control Unit;
- D is an output status, also known as condition code, it indicates cases such as carry-in, carry-out, overflow, division-by-zero, etc.

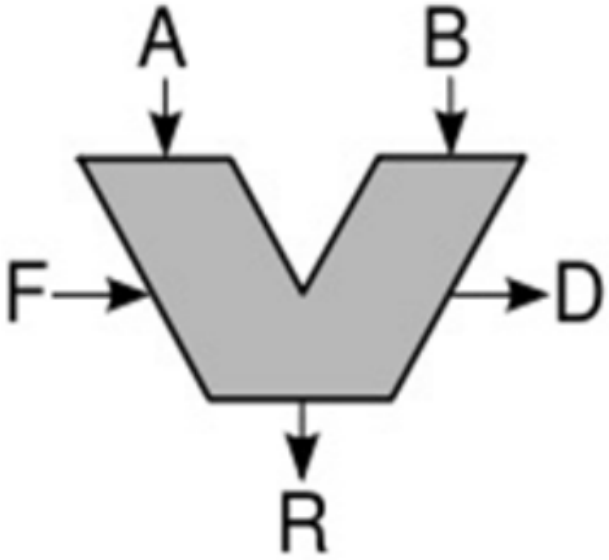

Simple operations

- Most ALUs can perform the following operations:

1. Integer arithmetic operations (addition, subtraction, and sometimes multiplication and division, though this is more expensive)
2. Bitwise logic operations (AND, NOT, OR, XOR)
3. Bit-shifting operations (shifting or rotating a word by a specified number of bits to the left or right, with or without sign extension). Shifts can be interpreted as multiplications by 2 and divisions by 2.

Decoders

- A **decoder** is a digital circuit that detects the presence of a specified combination of bits (code) on its inputs and indicates the presence of that code by a specified output level.

- A **decoder** is a logic circuit that accepts a set of inputs that represents a binary number and activates only the output that corresponds to that input number.

- A decoder circuit looks at its inputs, determines which binary number is present there, and activates the one output that corresponds to that number; all other outputs remain inactive.

- In its general form, a decoder has n input lines to handle n bits and from one to $2n$ output lines to indicate the presence of one or more n-bit combinations.

- In order to decode all possible combinations of four bits, sixteen decoding gates are required ($2^4 = 16$).

- This type of decoder is commonly called either a *4-line-to-16-line decoder* because there are four inputs and sixteen outputs or a *1-of-16 decoder* because for any given code on the inputs, one of the sixteen outputs is activated.

- The diagram for a general decoder is shown in Figure with N inputs and M outputs.

- Because each of the N inputs can be 0 or 1, there are possible input combinations or codes.

- For each of these input combinations, only one of the *M* outputs will be active (HIGH); all the other outputs are LOW.

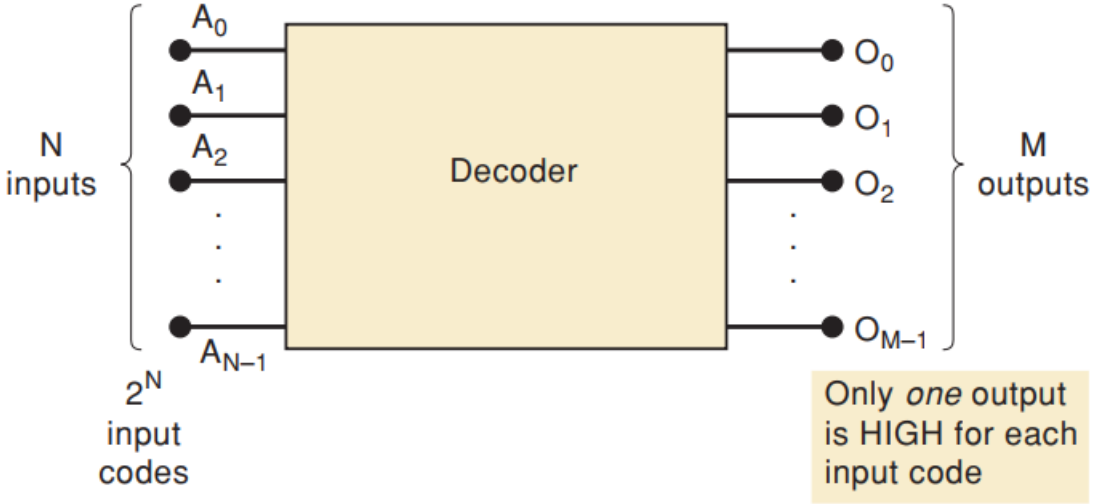

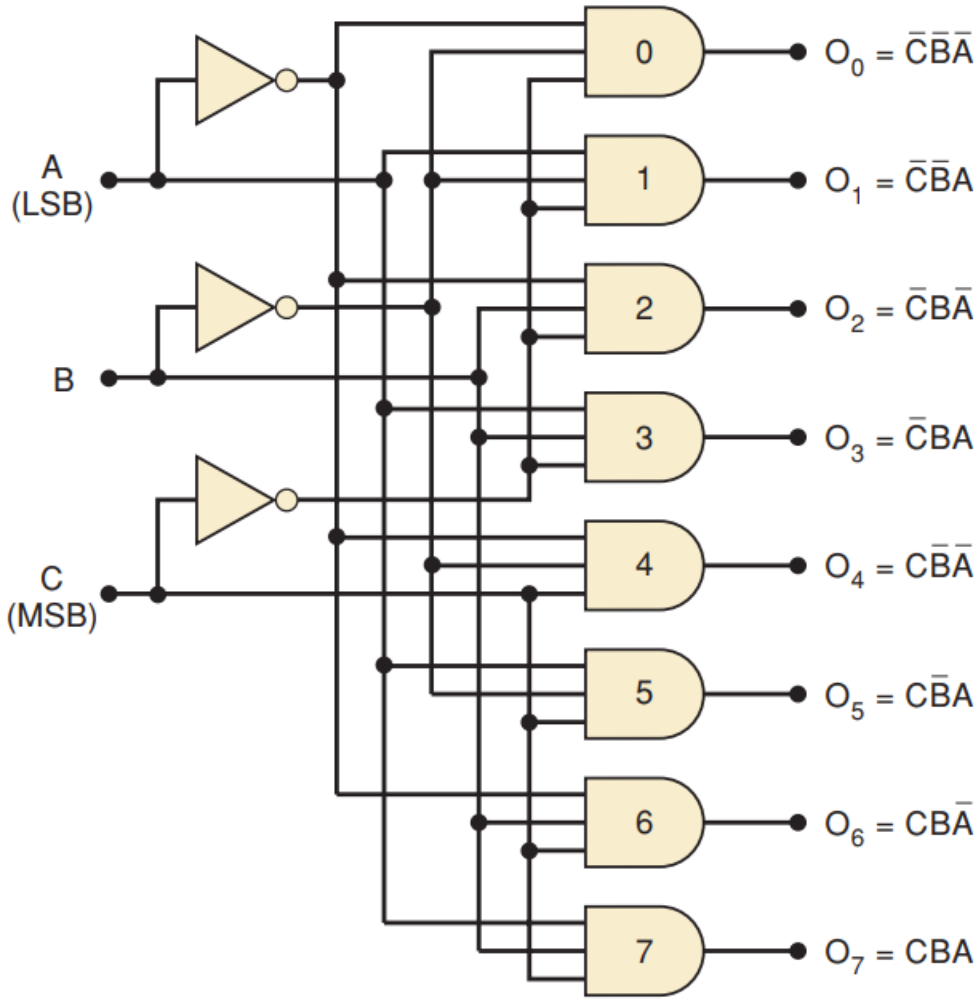

C	B	A	O_7	O_6	O_5	O_4	O_3	O_2	O_1	O_0
0	0	0	0	0	0	0	0	0	0	1
0	0	1	0	0	0	0	0	0	1	0
0	1	0	0	0	0	0	0	1	0	0
0	1	1	0	0	0	0	1	0	0	0
1	0	0	0	0	0	1	0	0	0	0
1	0	1	0	0	1	0	0	0	0	0
1	1	0	0	1	0	0	0	0	0	0
1	1	1	1	0	0	0	0	0	0	0

TABLE 6–4

Decoding functions and truth table for a 4-line-to-16-line (1-of-16) decoder with active-LOW outputs.

Decimal Digit	Binary Inputs				Decoding Function	Outputs															
	A_3	A_2	A_1	A_0		0	1	2	3	4	5	6	7	8	9	10	11	12	13	14	15
0	0	0	0	0	$\overline{A}_3\overline{A}_2\overline{A}_1\overline{A}_0$	0	1	1	1	1	1	1	1	1	1	1	1	1	1	1	1
1	0	0	0	1	$\overline{A}_3\overline{A}_2\overline{A}_1A_0$	1	0	1	1	1	1	1	1	1	1	1	1	1	1	1	1
2	0	0	1	0	$\overline{A}_3\overline{A}_2A_1\overline{A}_0$	1	1	0	1	1	1	1	1	1	1	1	1	1	1	1	1
3	0	0	1	1	$\overline{A}_3\overline{A}_2A_1A_0$	1	1	1	0	1	1	1	1	1	1	1	1	1	1	1	1
4	0	1	0	0	$\overline{A}_3A_2\overline{A}_1\overline{A}_0$	1	1	1	1	0	1	1	1	1	1	1	1	1	1	1	1
5	0	1	0	1	$\overline{A}_3A_2\overline{A}_1A_0$	1	1	1	1	1	0	1	1	1	1	1	1	1	1	1	1
6	0	1	1	0	$\overline{A}_3A_2A_1\overline{A}_0$	1	1	1	1	1	1	0	1	1	1	1	1	1	1	1	1
7	0	1	1	1	$\overline{A}_3A_2A_1A_0$	1	1	1	1	1	1	1	0	1	1	1	1	1	1	1	1
8	1	0	0	0	$A_3\overline{A}_2\overline{A}_1\overline{A}_0$	1	1	1	1	1	1	1	1	0	1	1	1	1	1	1	1
9	1	0	0	1	$A_3\overline{A}_2\overline{A}_1A_0$	1	1	1	1	1	1	1	1	1	0	1	1	1	1	1	1
10	1	0	1	0	$A_3\overline{A}_2A_1\overline{A}_0$	1	1	1	1	1	1	1	1	1	1	0	1	1	1	1	1
11	1	0	1	1	$A_3\overline{A}_2A_1A_0$	1	1	1	1	1	1	1	1	1	1	1	0	1	1	1	1
12	1	1	0	0	$A_3A_2\overline{A}_1\overline{A}_0$	1	1	1	1	1	1	1	1	1	1	1	1	0	1	1	1
13	1	1	0	1	$A_3A_2\overline{A}_1A_0$	1	1	1	1	1	1	1	1	1	1	1	1	1	0	1	1
14	1	1	1	0	$A_3A_2A_1\overline{A}_0$	1	1	1	1	1	1	1	1	1	1	1	1	1	1	0	1
15	1	1	1	1	$A_3A_2A_1A_0$	1	1	1	1	1	1	1	1	1	1	1	1	1	1	1	0

Determine the logic required to decode the binary number 1011 by producing a HIGH level on the output.

Solution

The decoding function can be formed by complementing only the variables that appear as 0 in the desired binary number, as follows:

$$X = A_3\overline{A}_2A_1A_0 \qquad (1011)$$

This function can be implemented by connecting the true (uncomplemented) variables A_0, A_1, and A_3 directly to the inputs of an AND gate, and inverting the variable A_2 before applying it to the AND gate input. The decoding logic is shown in Figure 6–27.

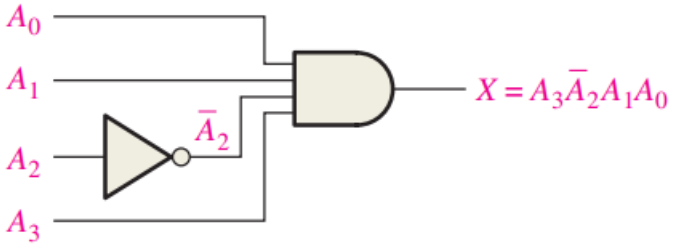

FIGURE 6–27 Decoding logic for producing a HIGH output when 1011 is on the inputs.

Applications of Decoders

Decoders are used in the cases where an output or a collection of outputs is to be activated only on the occurrence of a particular combination of input codes. Some important applications of decoders are listed below –

- Decoders are used for code conversions.
- Decoders are extensively used in memory systems of computers.
- Decoders are also used for de-multiplexing or data distribution.
- Decoders are also used in data routing applications where very short propagation delay is required.
- Decoder may also be used for timing or sequencing purposes.
- Decoders are also utilized to turn on and off digital devices at a specific time.

Encoders

- An encoder is a combinational logic circuit that essentially performs a “reverse” decoder function.

- An encoder accepts an active level on one of its inputs representing a digit, such as a decimal or octal digit, and converts it to a coded output, such as BCD or binary.

- Encoders can also be devised to encode various symbols and alphabetic characters. The process of converting from familiar symbols or numbers to a coded format is called encoding.

- We can say that a decoder identifies, recognizes, or detects a particular code. The opposite of this decoding process is called encoding and is performed by a logic circuit called an encoder.

- An encoder has a number of input lines, only one of which is activated at a given time, and produces an N-bit output code, depending on which input is activated.

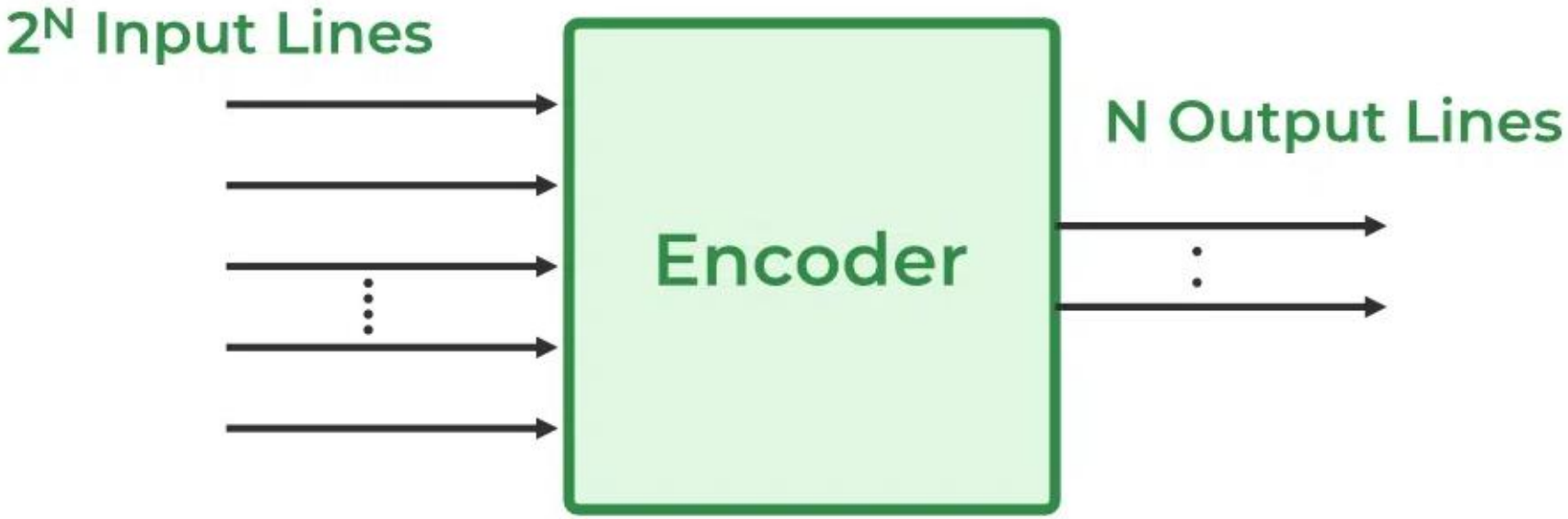
2^N Input Lines
Encoder
N Output Lines

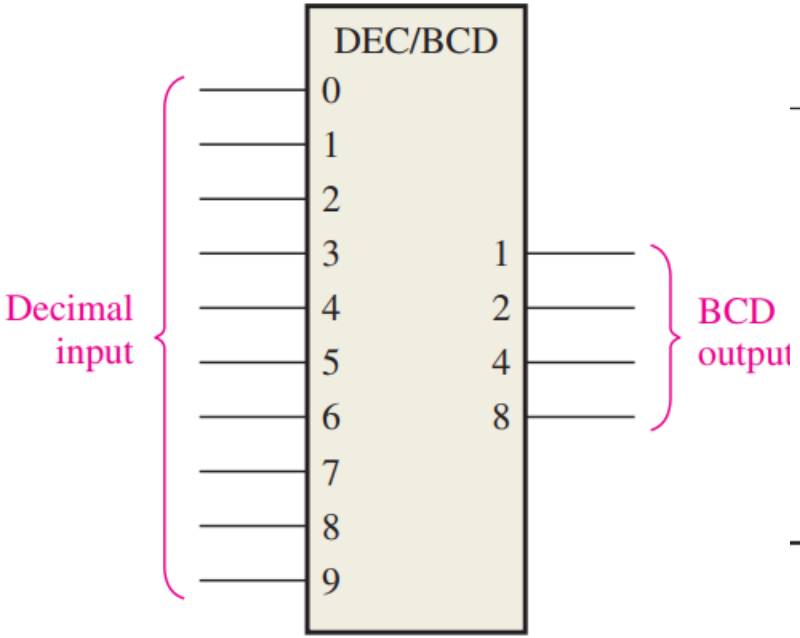

Decimal Digit	BCD Code A_3	A_2	A_1	A_0
0	0	0	0	0
1	0	0	0	1
2	0	0	1	0
3	0	0	1	1
4	0	1	0	0
5	0	1	0	1
6	0	1	1	0
7	0	1	1	1
8	1	0	0	0
9	1	0	0	1

Types of Encoders

Some of the commonly used types of encoders in digital electronics –

- 4 to 2 Encoder
- 8 to 3 Encoder (Octal Encoder)
- Decimal to BCD Encoder

4 to 2 Encoder

A 4 to 2 Encoder is a type of encoder which has 4 (2^2) input lines and 2 output lines. It produces an output code (i.e., convert input information in a 2-bit format) depending on the combination of input lines.

The block diagram of a 4 to 2 Encoder is shown in the following figure.

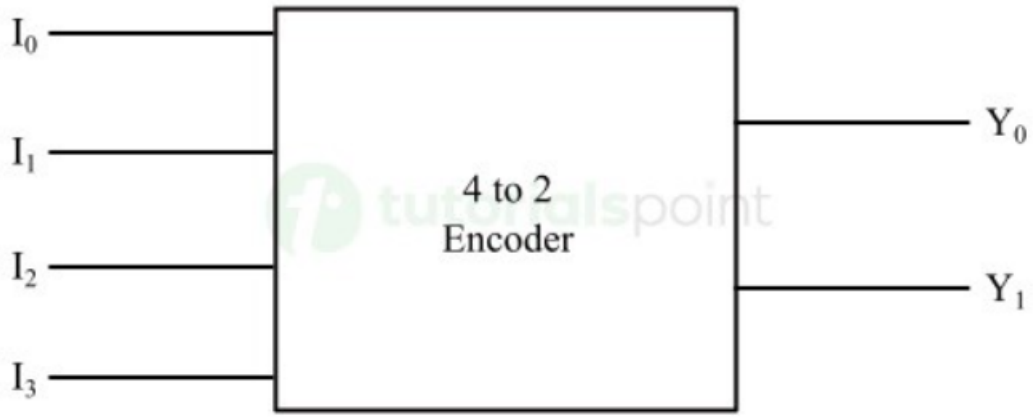

The working of a 4 to 2 Encoder for different input combinations is described in the following truth table –

Inputs				Outputs	
I_3	I_2	I_1	I_0	Y_1	Y_0
0	0	0	1	0	0
0	0	1	0	0	1
0	1	0	0	1	0
1	0	0	0	1	1

From this truth table, we can derive the Boolean expression for each output of the 4 to 2 Encoder as follows –

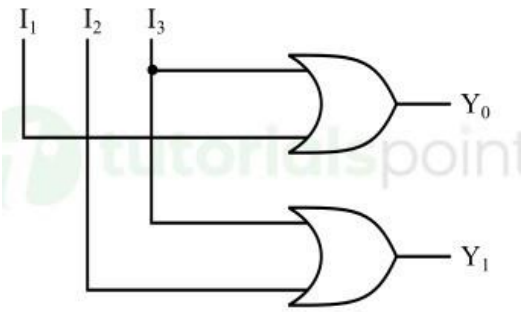

$$Y_0 = I_1 + I_3$$

$$Y_1 = I_2 + I_3$$

It is clear that we can implement the logic circuit of the 4 to 2 Encoder using two OR gates. The following figure depicts the logic diagram of the 4 to 2 Encoder.

Octal to Binary Encoder

The octal to binary encoder is a type of encoder that converts an octal code into binary code. It accepts 8 input lines and produces a 3-bit output depending on the combination of input lines. Therefore, it is also known as **8 to 3 Encoder**.

The **block diagram of an octal to binary encoder** is shown in the following figure –

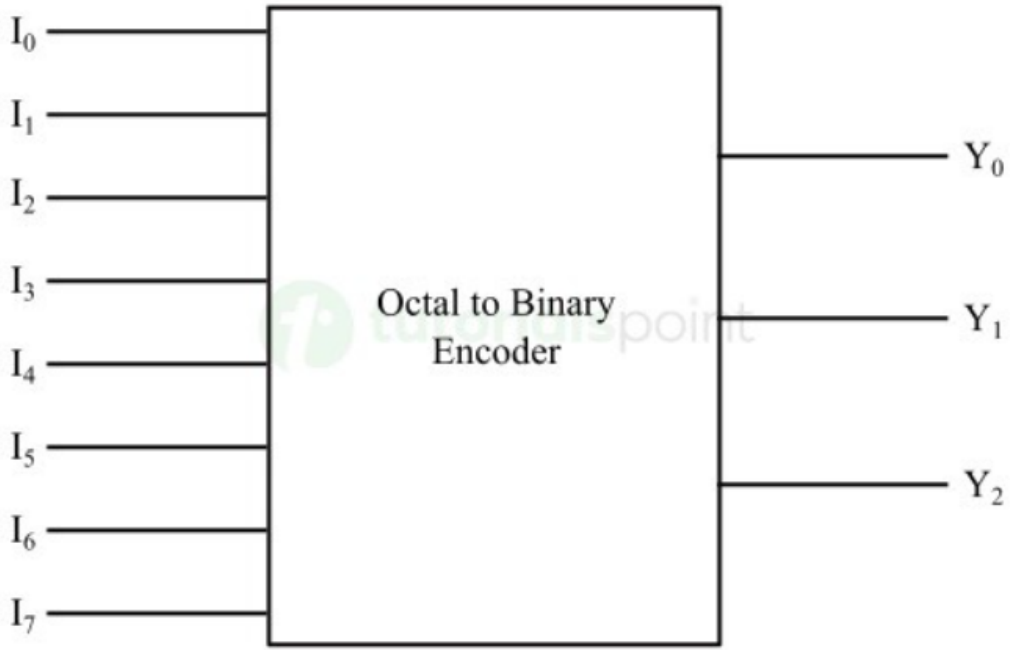

The following truth table describes the working of an octal to binary encoder –

Inputs								Outputs		
I_7	I_6	I_5	I_4	I_3	I_2	I_1	I_0	Y_2	Y_1	Y_0
0	0	0	0	0	0	0	1	0	0	0
0	0	0	0	0	0	1	0	0	0	1
0	0	0	0	0	1	0	0	0	1	0
0	0	0	0	1	0	0	0	0	1	1
0	0	0	1	0	0	0	0	1	0	0
0	0	1	0	0	0	0	0	1	0	1
0	1	0	0	0	0	0	0	1	1	0
1	0	0	0	0	0	0	0	1	1	1

$$Y_0 = I_1 + I_3 + I_5 + I_7$$

$$Y_1 = I_2 + I_3 + I_6 + I_7$$

$$Y_2 = I_4 + I_5 + I_6 + I_7$$

$$Y_0 = I_1 + I_3 + I_5 + I_7$$

$$Y_1 = I_2 + I_3 + I_6 + I_7$$

$$Y_2 = I_4 + I_5 + I_6 + I_7$$

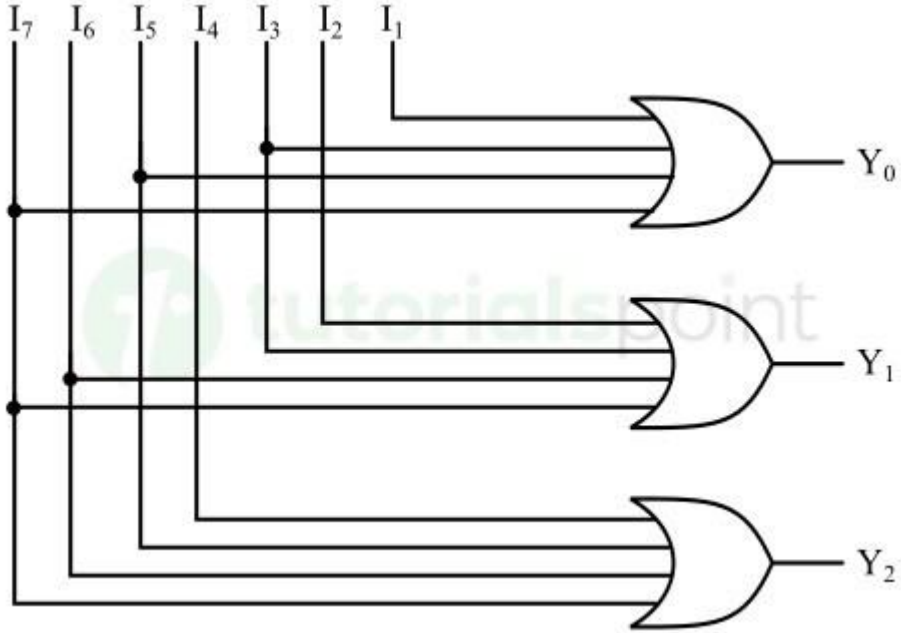

Decimal to BCD Encoder

A type of encoder that can convert a decimal number or information represented using decimal number into its equivalent binary-coded decimal (BCD) format is known as a decimal to BCD encoder.

In the BCD encoding scheme, each decimal digit can be converted into a 4-bit binary representation. The following table shows the BCD equivalents of decimal digital from 0 to 9.

Decimal Digit	BCD Code			
0	0	0	0	0
1	0	0	0	1
2	0	0	1	0
3	0	0	1	1
4	0	1	0	0
5	0	1	0	1
6	0	1	1	0
7	0	1	1	1
8	1	0	0	0
9	1	0	0	1

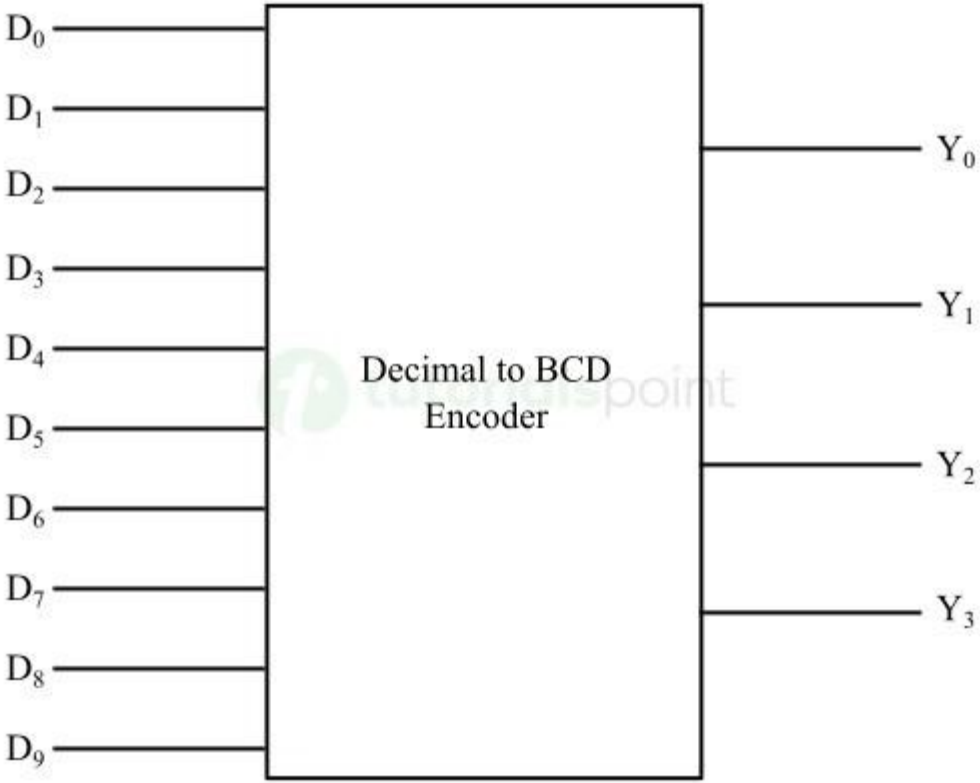
D0
D1
D2
D3
D4
D5
D6
D7
D8
D9
Decimal to BCD
Encoder
Y0
Y1
Y2
Y3

The truth table describing the working of the decimal to BCD encoder is given blow –

Inputs										Outputs			
D_9	D_8	D_7	D_6	D_5	D_4	D_3	D_2	D_1	D_0	Y_3	Y_2	Y_1	Y_0
0	0	0	0	0	0	0	0	0	1	0	0	0	0
0	0	0	0	0	0	0	0	1	0	0	0	0	1
0	0	0	0	0	0	0	1	0	0	0	0	1	0
0	0	0	0	0	0	1	0	0	0	0	0	1	1
0	0	0	0	0	1	0	0	0	0	0	1	0	0
0	0	0	0	1	0	0	0	0	0	0	1	0	1
0	0	0	1	0	0	0	0	0	0	0	1	1	0
0	0	1	0	0	0	0	0	0	0	0	1	1	1
0	1	0	0	0	0	0	0	0	0	1	0	0	0
1	0	0	0	0	0	0	0	0	0	1	0	0	1

$$Y_0 = D_1 + D_3 + D_5 + D_7 + D_9$$

$$Y_1 = D_2 + D_3 + D_6 + D_7$$

$$Y_2 = D_4 + D_5 + D_6 + D_7$$

$$Y_3 = D_8 + D_9$$

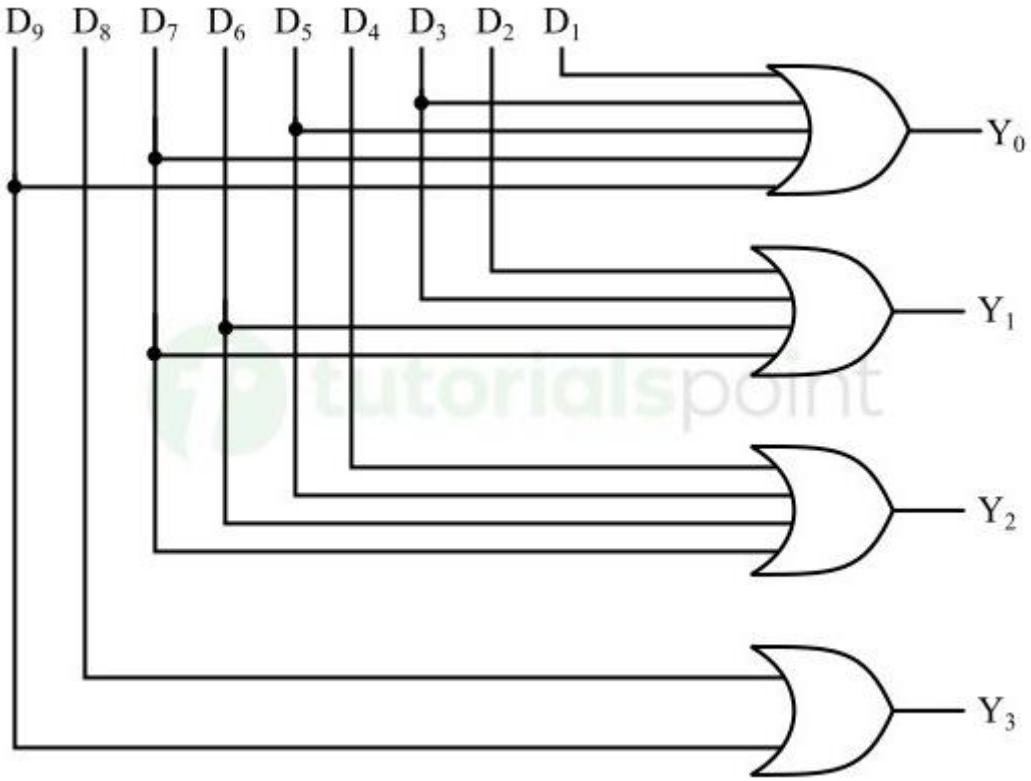

Applications

- The 4 to 2 Encoder is widely used in the following applications: Data multiplexing, Generating digital control signals, Address decoding applications, Encoding data in digital systems, etc.

- The octal to binary encoder is used in the following applications −

Data conversion in digital systems. Conversion of octal memory addresses into binary memory addresses. In microprocessors and microcontrollers, to convert octal instructions into binary format. In communication systems, to encode octal data into binary form for transmission, etc.

- Decimal to BCD encoders find their application in digital clocks and timers, data processing devices and storage systems, calculators, measuring instruments, display devices, microprocessors, microcontrollers, embedded systems, etc.